BIANCO™

Dimmable Driver

Dimmable driver engineered for performance where it matters and flexibility where projects demand it.

LUCETTA CI

IP20 | 24 VDC | JA8 TITLE 24

General Specifications

Input Voltage / Frequency	120VAC, 50/60Hz
Environment	Outdoor / Wet Location
IP Rating	NEMA3R
Warranty	5 Year Limited
Ambient Temperature	-22 ~ +122°F (-30 ~ +50°C)
Operating Temperature	-40 ~ +140°F (-40 ~+60°C)

Features

- Maximum light engine compatibility
- 120VAC input with 24VDC Class 2 output
- Forward and Reverse phase dimming
- <1% dimming with compatible ELV and TRIAC controls
- 5 Year Limited Warranty

Model Specifications

	LCI-BNCO-24V60W-J	LCI-BNCO-24V96W-J
Minimum Load	5W	6W

SKU Builder

1 Brand	2 Model	3 Form	4 Junction Box
LCI	BNCO		J

www.LucettaCI.com	**BNCO**	(BIANCO™)	**24V60W**	(24V60W)	**J**	(Junction Box)
			24V96W	(24V96W)		

BIANCO™

Dimmable Driver

Dimmable driver engineered for performance where it matters and flexibility where projects demand it.

Dimensions

LCI-BNCO-24V60W-J

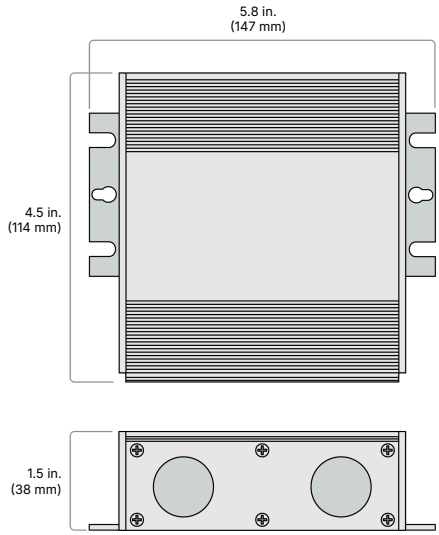

LCI-BNCO-24V96W-J

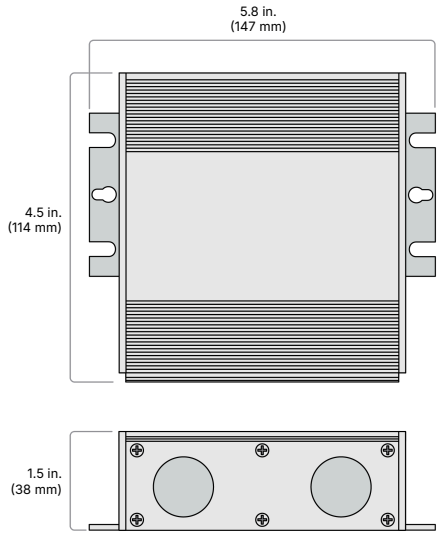

Recommended Dimmers

- LUTRON: DVELV-300
- LUTRON: DVRP-253P
- LUTRON: CTCL-153P
- LUTRON: DVCL-153P
- LUTRON: MRF2-6ND
- LUTRON: RRST-PRO
- LUTRON: MAELV-600
- LUTRON: PD5-NE
- LUTRON: MACL-153M
- LEVITON: DDL06-1LZ
- LEVITON: IPL06-10Z
- LEVITON: Sureslide 6674-P
- LEVITON: D26H
- LEGRAND: ADTP703TU

Deration Curve

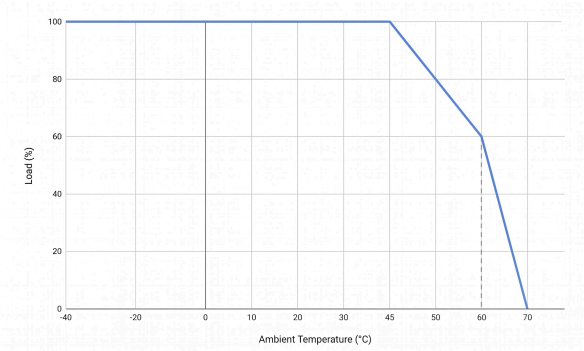

Electronic System Diagram

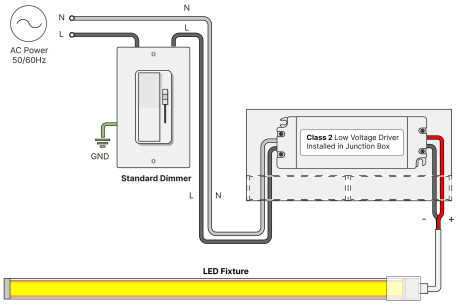

Safety

cULus (US & Canada) Listed, UL # E550960, ANSI/UL 1310 Power Unit, CAN/CSA C22.2 No. 250.13, Class P, FCC Part 15 Compliant

Title 24 JA8/JA10 Compliant

Environment

Outdoor / Wet Location

Performance

Can be used to comply with TITLE 24 Part 6 High Efficacy Lighting LED requirements - JA8-2016-2022-E

Safety / Warnings / Disclosures

- Install in accordance with national and local electrical code regulations.
- This product is intended to be installed and serviced by a qualified, licensed electrician.
- Only use copper wiring. Use wires rated for at least 176°F (80°C) and certified for use with external connection of electrical equipment.
- Tape light, attached wire leads, and additional extension cables, connectors, etc., are not rated for in-wall installation unless otherwise noted. Tape light and attached wire leads are field-cuttable.
- Ensure applicable wire is installed between driver, fixture, and any controls in-between. When choosing wire, factor in voltage drop, amperage rating, and type (in-wall rated, wet location rated, etc.). Inadequate wire installation could overheat wires, and cause fire.
- Do not install in environment where excessive heat may exist (ex. close proximity to fireplace, etc.) See Ambient Temperature ratings
- Do not modify product beyond instructions or warranty will be void.
- Tape light must be handled with care. Excessive handling, bending, and pressure may damage the product, voiding the warranty.
- Actual color may vary from what is pictured on this sheet and other print materials due to the limitations of photographic processes.
- We reserve the right to modify and improve the design of our fixtures without prior notice. We cannot guarantee to match existing installed fixtures for subsequent orders or replacements in regards to product appearance, CCT, or lumen output.

Warranty

5 Year Limited Warranty

This warranty does not include the additional accessories referenced in this specification sheet. Complete warranty details for fixtures and additional accessories are available at www.diodeled.com/limited-warranty/ within the Policies section. For warranty related questions please contact product support.

Use of an unauthorized 3rd party driver with our lighting products may void the warranty.

Elemental LED, Inc. stands behind its products when they are used properly and according to our specifications. By purchasing our products, the purchaser agrees and acknowledges that lighting design, configuration and installation is a complex process, wherein seemingly minor factors or changes in layout and infield adjustments can have a significant impact on an entire system. Choosing the correct components is essential. Elemental LED is able to work with the original purchaser to make an appropriate product selection to the extent of the limited information that the customer can provide, but it is virtually impossible for Elemental LED to design a system that foresees every unknown factor. For this reason, this Warranty does not cover problems caused by improper design, configuration or installation issues. Any statement from a Elemental LED employee or agent regarding a customer's bill of goods and/or purchase order is NOT an acknowledgment that the products purchased are designed and configured correctly. The purchase agrees and acknowledges that it is the customer's responsibility to adhere strictly to all information contained in the Product Specification Sheets.

There is often more than one way to design, configure and layout an LED lighting application properly to achieve the same lighting effect. Elemental LED strongly recommends that licensed professionals be used in the design and installation of lighting systems that include Elemental LED products. The specifications include important information that a designer and installer should carefully review and strictly follow. Qualified designers and certified and/or licensed installers, with access to the final installation environment, customer goals, and Elemental LED product specifications can make the requisite decisions appropriate for a successful finished lighting application.

Copyright © 2025 Elemental LED, Inc. All rights reserved